A Robust Voltage and Current Stabilization Method for Ultra-Low Voltage Low-Power Inverter-Based RF LNTAs

Giovana P. Ceolin[1], Raul P. de Oliveira[1], Tailize C. De-Oliveira[1], André da F. Ponchet[2], Paulo César C. de Aguirre[1], Alessandro G. Girardi[1] and Lucas Compassi-Severo[2]

Alegrete Campus, Federal University of Pampa, Alegrete, RS, Brazil
Electronic Engineering Division, Aeronautics Institute of Technology, São José dos Campos, SP, Brazil
E-mail: giovana.ceolin@unipampa.edu.br, severolcs@ita.br

***Abstract*— Ultra-low voltage inverter-based low-noise transconductance amplifiers (LNTA) are used for the implementation of energy-efficient short-range RF receivers due to their high equivalent gm/I_D ratio. However, they are very sensitive to process, voltage and temperature (PVT) variations, so active biasing circuits are required for proper operation. In this paper, a novel method based on forward bulk biasing is presented to compensate for the variability of the output voltage and drained current of an inverter-based LNTA implementation without the need for a stacked control transistor. To demonstrate the effectiveness of the proposed method, an LNTA was developed in a 65 nm CMOS process with low-VT deep-nwell transistors operating at a supply voltage of 0.4 V in the 2.4 GHz ISM band. Post-layout simulations resulted in a power dissipation of 235 μW, a noise figure of 3.17 dB, a voltage gain of 12.6 dB and a silicon area of 0.11 mm^2. The execution of a 1,000-run post-layout Monte Carlo analysis has shown that the proposed biasing method drastically reduces the sensitivity to process variability even considering the supply voltage variation of $\pm$ 10% and a temperature range of -40 ^{o}C to 100 ^{o}C.**

***Index Terms*— Biasing methods; LNTA; Low-energy; PVT robust ; Ultra-low voltage; Low-noise.**

I. Introduction

Modern low-energy (LE) RF transceivers are highly demanded by IoT applications that use short-range wireless communication, such as wearable and implanted devices, wireless sensor networks and track tags. In these applications, sub-mW RF transceivers are required to extend battery lifetime or to make it suitable to be supplied with a low-density energy harvester [1, 2].

Recent works presented in literature have shown that the combination of ultra-low voltage (ULV) operation and current-driven down-converting path is the key strategy for the development of LE RF receiver front-ends [3, 4]. Fig. 1 shows the block diagram of a typical ULV LE RF receiver front-end. The first active circuit is the low-noise transconductance amplifier (LNTA). It amplifies the received voltage signal and provides an output current signal to the down-conversion stage, which generally consists of a passive mixer and a balanced transimpedance amplifier (TIA) [5].

Apart from the local oscillators, the LNTA is usually the most power-hungry circuit in the receiver front-end, since the passive mixer consists only of switches and the TIA is based on low-frequency operational transconductance amplifiers. Thus, the development of more power-efficient LNTA

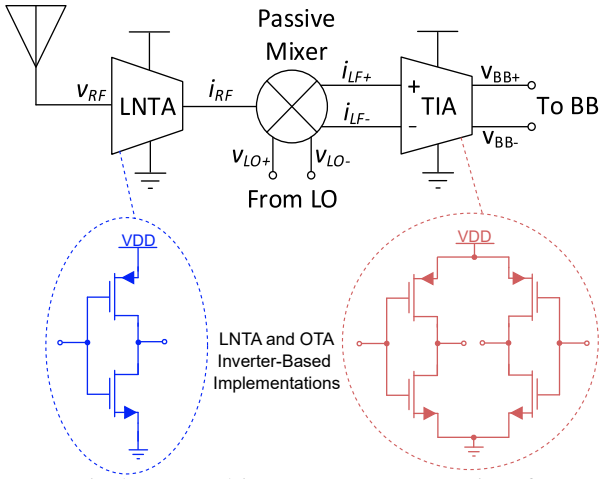

Fig. 1: Typical current-driven ULV LE RF receiver front-end using inverter-based circuit implementation.

topologies can contribute to the reduction of power dissipation in this type of RF front-end architecture.

Inverter-based circuit topologies, as depicted in Fig. 1, are widely used for the implementation of LE receiver front-ends due to their high equivalent g_m/I_D efficiency [6, 7, 8]. However, CMOS inverters are highly sensitive to process, voltage and temperature (PVT) variations when operating with a reduced supply voltage. Therefore, active biasing circuits are required for proper operation at ULV. This strategy is described in [17] and [18], where replica biasing using error amplifiers is employed in low-frequency inverter-based OTAs to compensate for PVT variations and maintain the output DC voltage at V_{DD}/2. It enables the use of the inverted-based OTA as an analog standard cell [17].

A similar voltage-controlling approach applied to RF ULV LNA is presented in [11], but the control of the output DC voltage proved to be efficient only for the low-frequency parameters. The high-frequency parameters such as voltage gain at the RF operating frequency, noise figure, and transition frequency depend more on the variation of the transistor drain current than on the DC output voltage.

Controlling the drain current in ULV inverter-based circuits is a challenge. Most of the solutions described in the literature use current mirrors and current source transistors stacked with the main CMOS inverter [16, 9]. Besides the possibility of compensating for PVT drain current variability, increasing the number of stacked transistors is a drawback for ULV implementations.

To overcome this problem, this paper presents a novel bi-

Digital Object Identifier 10.29292/jics.v20i1.951

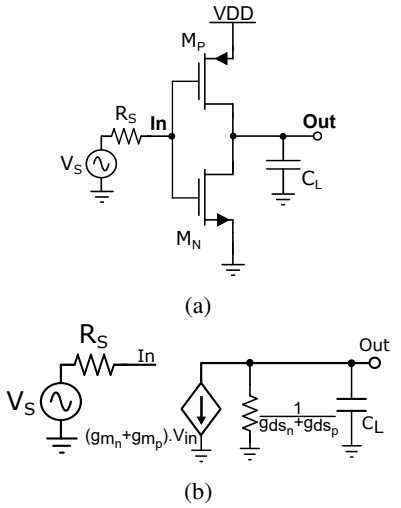

Fig. 2: Simplified inverter-based LNTA. Biasing is not shown.

asing circuit for inverter-based LNTAs in which both the drain current and the DC output voltage are controlled by two closed-loop forward bulk biasing circuits. It enables the use of only two stacked transistors for the implementation of the LNTA and the gate-to-source voltage of the RF transistors can be increased, maximizing the voltage headroom and inversion level. To demonstrate the proposed technique, the design of a robust ULV low-power LNTA operating with 0.4-V power supply at a 65-nm CMOS process is presented. The LNTA performance is estimated by post-layout simulation results and the PVT robustness is evaluated with Monte Carlo analysis.

This paper is organized as follows. Section II shows the bias analysis of LNTAs, section III presents the proposed robust biasing circuit, section IV details the design and simulation results and, finally, section V concludes this paper.

II. Inverter-Based LNTA Biasing

The RF amplifier behavior is directly related to the transistor operating bias point and small-signal parameters. Fig. 2a shows a simplified inverter-based LNTA, in which the biasing circuit is not shown. Performing the small-signal circuit analysis described in [10] (Fig. 2b), it is possible to obtain analytical equations for the most important performance features of the circuit, such as noise figure (NF) and voltage gain (A_v), as shown in (1) and (2), respectively.

$$NF \approx 1 + \frac{\gamma}{R_S \cdot \left(g_{m_n} + g_{m_p}\right)} \tag{1}$$

$$|A_v(f)| = \sqrt{\frac{(g_{m_n} + g_{m_p})^2}{(2\pi f C_L)^2 + (g_{ds_n} + g_{ds_p})^2}} \tag{2}$$

Here, γ is the thermal noise parameter, R_s is the source characteristic impedance, C_L is the output load capacitance and $g_{m_{n(p)}}, g_{ds_{n(p)}}$ are the NMOS (PMOS) transconductance and output conductance, respectively.

Both NF and $|A_v(f)|$ are related to the equivalent transconductance $g_{m_n} + g_{m_p}$, which can be rewritten as a function of the drain current (I_D) and the g_m/I_D ratio of the NMOS and PMOS transistors, as shown in (3).

$$g_{m_n} + g_{m_p} = I_D \cdot \left[\left(\frac{g_m}{I_D}\right)_n + \left(\frac{g_m}{I_D}\right)_p \right] \tag{3}$$

As the g_m/I_D ratio generally presents reduced variability in CMOS processes, the variability of NF and $|A_v(f)|$ is dominated by the variation of I_D.

In addition to the dependence of the main LNTA specifications on I_D, it is also important to control the fluctuations of the output DC voltage ($V_{out_{DC}}$). The low-frequency gain ($|A_v(0)|$) is very sensitive to the equivalent output conductance $g_{ds_n} + g_{ds_p}$, so that the transistor must operate in the saturation region. Due to the reduced drain to source voltage (V_{DS}) of the transistors, $V_{out_{DC}}$ should be kept around $V_{DD}/2$, guaranteeing that both PMOS and NMOS transistors are saturated. However, a small deviation of the transistor bias point caused by PVT variations is sufficient to leave the saturation region. Therefore, it is essential to design an active biasing circuit capable of compensating for the variability of inverter-based circuits.

Fig. 3 shows some biasing strategies that can be employed in ULV LNTAs without requiring extra stacked transistors. The most commonly used topology is the resistive feedback implementation shown in Fig. 3a [6]. In this topology, the NMOS transistor is biased by a current mirror and the PMOS transistor is self-biased by the resistor R_P with the DC output voltage. The advantage of this topology is the use of a current mirror to adjust the gate to source voltage (V_{GS}) of the NMOS transistor to match the drain current level to the bias current source (I_{BN}), compensating for the variability of the equivalent transconductance. Another strategy, presented by [7], is shown in Fig. 3b, where both the NMOS and PMOS gate terminals are biased by the V_B voltage provided by a replica circuit composed of a CMOS inverter with input and output nodes connected through resistor R_R. Despite the simplicity of these strategies, the maximum allowed level for the V_{GS} voltages of the NMOS and PMOS transistors is limited to about $V_{DD}/2$ in ULV implementations, limiting the channel inversion level of those transistors.

As presented in [11], the best biasing metric value for low-voltage LNAs is found when operating in moderate inversion region, where transistors are operating with V_{GS} levels close to threshold voltage (V_{TH}). Since the V_{TH} level of the transistors found in CMOS processes from 65 nm to 180 nm is in the range of 0.3 V to 0.5 V, classical current mirrors and self-biased topologies cannot be optimized to operate with V_{DD} below 0.5 V, as required in ULV applications.

Fig. 3c and 3d show two biasing strategies that do not require the use of either current mirrors or feedback resistors. In these cases, both NMOS and PMOS have $|V_{GS}|$ equal to V_{DD}, which is obtained by R_P and R_N. Since they have fixed V_{GS}, both the drain current and the DC output voltage are sensitive to process and temperature variations. To overcome this issue, forward-bulk biasing (FBB) is used to compensate for variability. The body effect of the CMOS process contributes to reducing V_{TH} and to increasing the channel inversion level in ULV operation [12].

The strategy shown in Fig. 3c was proposed by [11], in which the bulk of PMOS transistor is controlled by a DC

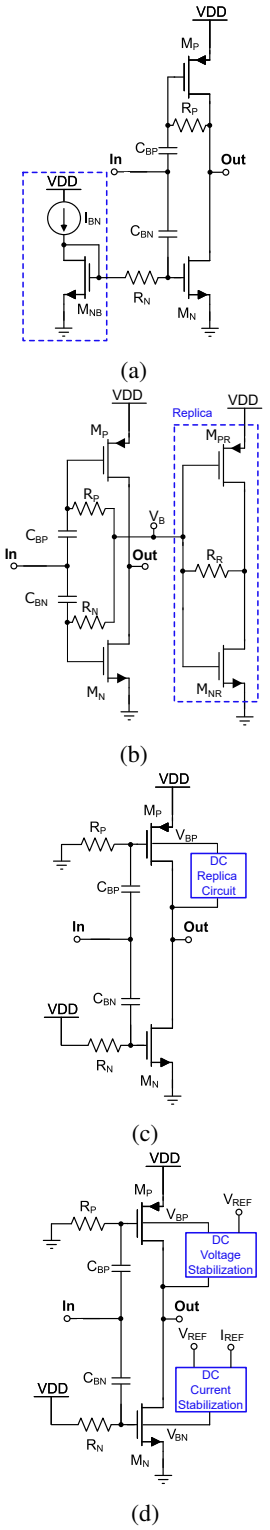

Fig. 3: Inverter-based LNTAs biasing strategies. (a) Current-mirror and self-biased PMOS; (b) common-gate replica biasing; (c) PMOS forward-bulk biasing; (d) NMOS and PMOS forward-bulk biasing.

replica circuit and an error amplifier to make the output DC voltage equal to $V_{DD}/2$. This allows the output voltage to be controlled, but the variation of I_D still affects $|A_v(f)|$ and NF, as shown in (1) to (3).

In this work, we propose an improved biasing circuit for the inverter-based LNTA based on the biasing strategy shown in Fig. 3d. In the biasing strategy, both PMOS and NMOS transistors use independent FBB techniques to simultaneously keep the output voltage and drain current stable at the desired values. As the FBB voltage is reduced - in this work limited to 0.4 V -, the forward leakage current from bulk to source is minimal [19].

III. LNTA Circuit with Robust Biasing

The proposed biasing strategy is composed of two main circuits: DC Voltage Stabilization (DCVS) and DC Current Stabilization (DCCS).

The DCCS circuit is depicted in Fig. 4. It is composed of an error amplifier, a reference current source and a replica NMOS transistor. The main advantage of this method is the indirect current control through the forward bulk voltage of the NMOS transistor. The I_{ref} current source forces the desired drain current in M_{NR2}, changing the V_{DS} voltage of the M_{NR2} transistor (V_{cm}). The error amplifier is used to compare V_{cm} with a reference voltage (V_{ref}) and to control the bulk voltage of M_{NR2} to maintain V_{DS} equal to V_{ref}. In steady state, transistor M_{NR2} presents both I_D and V_{DS} equal to I_{ref} and V_{ref}, respectively.

The same bulk voltage of M_{NR2} (V_{BN}) is applied to the bulk of the NMOS transistor of the main LNTA (M_N). So, if the main LNTA also has the V_{DS} voltage adjusted to V_{ref}, it presents the same drain current I_{ref}. The replica bias adjusts the bulk voltage in order to satisfy the two biasing requirements: $I_D = I_{ref}$ and $V_{DS} = V_{ref}$. As the replica circuit and the main LNTA transistors present the same V_{GS} and V_{DS} voltages, both drain currents are adjusted to the same level.

The DCVS circuit is implemented by an error amplifier that measures the DC output voltage of the LNTA and controls the bulk terminal of the PMOS transistor, setting the output DC voltage to V_{ref}. However, the error amplifier causes an undesirable increase in the output load of the

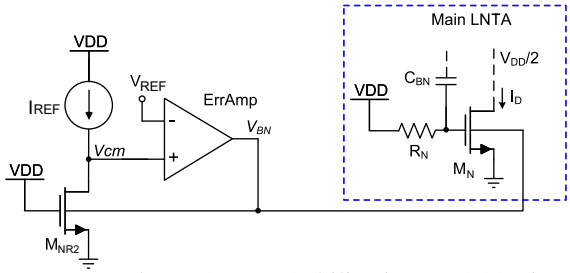

Fig. 4: Proposed DC Current Stabilization (DCCS) circuit.

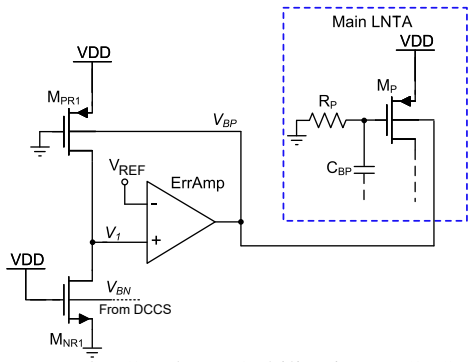

Fig. 5: Proposed DC Voltage Stabilization (DCVS) circuit.

Digital Object Identifier 10.29292/jics.v20i1.951

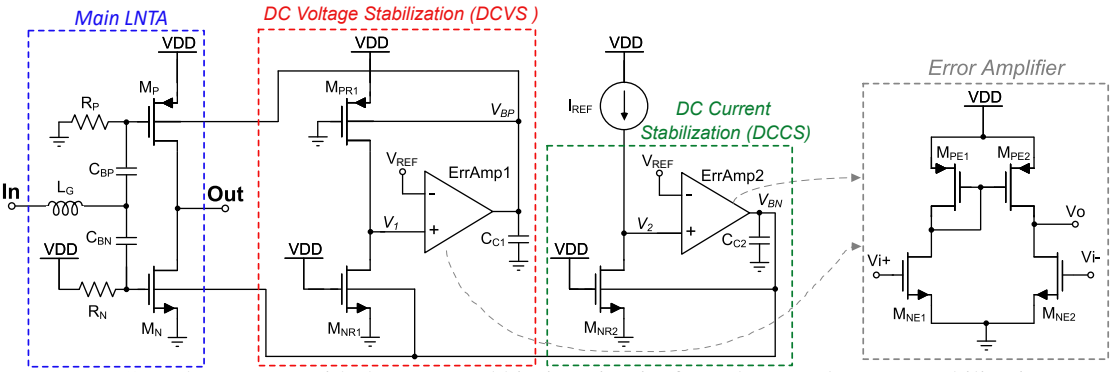

Fig. 6: Complete LNTA with the proposed biasing circuits for voltage and current stabilization.

LNTA due to its parasitic input capacitance, reducing the voltage gain at the desired operation frequency (see (2)). To overcome this issue, a replica bias circuit [13] is used in the proposed DCVC circuit implementation as shown in Fig. 5. It uses a replica of the main LNTA, composed of transistors M_{NR1} and M_{PR1} and the error amplifier, to measure the voltage level at node V_1 and to control the voltage of the bulk terminal of M_{PR1} to make the voltage V_1 equal to V_{ref}. The bulk control voltage V_{BP} is also applied to the PMOS transistor of the main LNTA (M_P), making the LNTA DC output voltage stable at V_{ref}. The bulk terminal of M_{NR1} is biased by the DCCS circuit to compensate for the current mismatch between the main LNTA and the replica.

The complete schematic of a ULV LNTA with the application of the proposed biasing strategy is shown in Fig. 6. The main LNTA is composed of DC-blocking capacitors (C_{BN} and C_{BP}), biasing resistors (R_N and R_P) and CMOS insulated bulk transistors (M_N and M_P). An inductor (L_G) is adopted at the input to cancel the reactive part of the input impedance to match with the source impedance. The DCCS and DCVS circuits are implemented as presented on Fig. 4 and Fig. 5, but compensation capacitors (C_{C1} and C_{C2}) are added to the output of the error amplifiers in order to improve the closed-loop phase margins and to avoid instabilities. The error amplifiers ($ErrAmp_1$ and $ErrAmp_2$) are implemented using a simple pseudo-differential amplifier composed of transistors $M_{NE1,2}$ and $M_{PE1,2}$. It is a simple topology suitable for ultra-low voltage operation (as presented in [19], [18] and [13]) and can be designed with very low bandwidth to reduce power dissipation.

The transistors of the main amplifier should be designed using parallel device association instead of multi-finger devices to reduce the effects of mismatch between the main amplifier and the biasing replica circuits. In addition, the biasing transistors should be placed in the same bulk region of the main amplifier in order to maintain the same bulk bias voltage.

IV. Design and Post-Layout Simulation Results

The LNTA topology shown in Fig. 6, was designed using a 9-metal CMOS 65 nm technology to operate with a nominal supply voltage (V_{DD}) of 0.4 V at the 2.4 GHz ISM band. The VBP and VBN voltages are designed to be at 0.2 V at the typical corner to allow both increase and decrease in their values to ensure the operation of the current and voltage stabilization circuits. Transistors M_N and M_P were designed using low-V_T devices to reach the moderate channel inversion level with the gate-to-source voltage of 0.4 V (-0.4 V to PMOS) provided by resistors R_N and R_P. Bulk deep-nwell insulation was employed under the NMOS devices to allow forward bulk biasing.

An iterative simulation-based design process on Cadence Virtuoso® was used to size the devices in order to find a reasonable voltage gain and reduced noise figure at 2.4 GHz while matching the input impedance to the 50 Ω source impedance. The channel length of M_N and M_P was fixed in 130 nm to reduce the reverse short-channel effect (RSCE) on V_{TH} presented by the minimal channel length devices. The channel widths of the transistors were chosen to be 2.9 μm and 10.5 μm for NMOS and PMOS, respectively, with 28 multiples each. In this configuration, the NMOS and PMOS transistors present transconductances of 9.1 mS and 10.1 mS, respectively, which results in an equivalent transconductance $g_{m_n} + g_{m_p}$ of 19.2 mS. The transistors used in the replica (M_{NR1}, M_{NR2} and M_{PR1}) have the same W and L of the transistors of the main amplifier but use a single multiple to reduce power consumption.

The biasing resistors R_N and R_P were sized to 100 kΩ to reduce their effect on the input impedance and noise figure. The DC blocking capacitors C_{BN} and C_{BP} were designed with 8 pF MiM capacitors to present a low reactance at 2.4 GHz.

The closed-loop biasing was designed using massive stability analysis in order to present closed-loop phase margins higher than 50° in both NMOS and PMOS replica biasing schemes, thus avoiding instabilities. Since the closed-loop biasing is intended only for DC, the error amplifiers ($ErrAmp_1$ and $ErrAmp_2$) were designed with a very low current level to save power and also to make the dominant pole of the closed-loop at very low frequencies. The maximum output DC current required by the forward bulk bias of the main LNA and replica transistors is 0.8 nA at V_{BSN} ($|V_{BSP}|$) equal to 0.4 V. Thus, the error amplifiers were design to present a drain current around 100 nA, making the output current to be lower than 1% of the current biasing level. Additionally, long-channel standard-V_T transistors were employed to reduce the input offset voltage. $M_{NE1,2}$ and $M_{PE1,2}$ were sized to 1.8/10.0 $\mu m/\mu m$ and 10.0/15.0 $\mu m/\mu m$, respectively, with two multiples each.

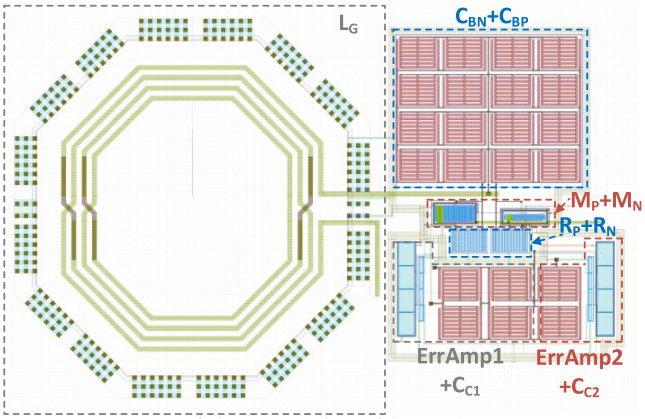

Fig. 7: Layout of the LNTA in a 65 nm CMOS process.

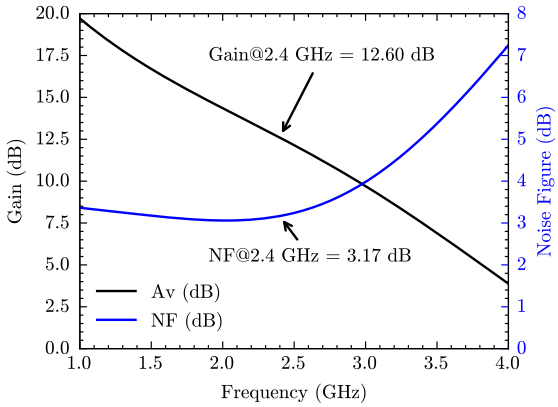

Fig. 8: Voltage gain and noise figure as a function of frequency.

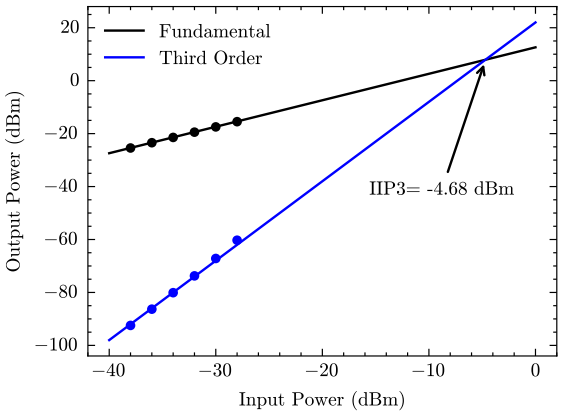

Fig. 9: Input third-order intercept point (IIP_3).

Compensation capacitors C_{C_1} and C_{C_2} were set to 4 pF and 2 pF, respectively. The input inductor L_G was designed through Smith chart analysis after layout parasitic extraction. An inductor with 4.72 nH, Q of 11.3 and SRF of 11.2 GHz was selected from the process design kit (PDK).

Fig. 7 shows the layout of the designed LNTA, which occupies a silicon area of 0.11 mm^2, including inductor and capacitors. It can be seen that most of the area is occupied by the inductor and capacitors. The DCCS and DCVS circuits represent a small area overhead to the original LNTA.

Post-layout electrical simulations were executed to evaluate the circuit performance and main characteristics. At typical operation conditions with V_{DD} of 0.4 V and temperature

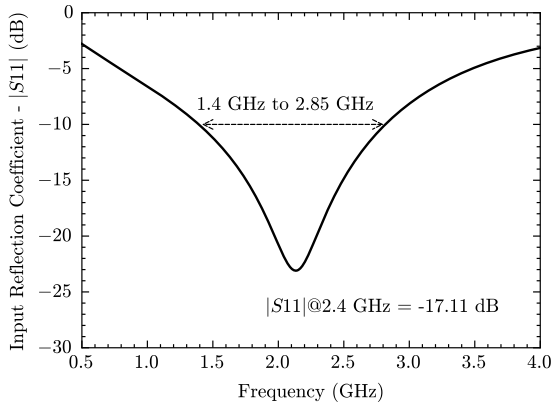

Fig. 10: Input Reflection Coefficient ($|S_{11}|$) as a function of frequency.

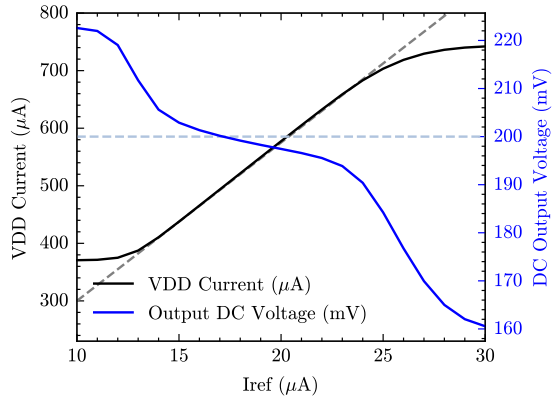

Fig. 11: Drained current from V_{DD} and the output DC voltage as a function of the reference current level (I_{ref}).

of 27°C, the designed LNTA presented a NF of 3.17 dB and a voltage gain of 12.6 dB at the desired operating frequency of 2.4 GHz, as shown in Fig. 8. As expected by the behavior shown in equation 2, one can see the gain variation with the frequency.

The LNTA presented input third-order intercept point (IIP3) of -4.68 dBm as shown in Fig. 9. Fig. 10 shows the simulation result of the LNTA input reflection coefficient ($|S_{11}|$), in which it is possible to verify that the circuit presents good impedance matching, keeping $|S_{11}|$ lower than -10 dB in the frequency range from 1.4 GHz to 2.85 GHz. The total power dissipation was 235.1 μW, in which only 17.5 μW was dissipated by the DCVS and DCCS biasing circuits. It represents an increase of only 7.44% in power consumption compared to the LNTA without the stabilization scheme.

The bulk leakage current generated due to forward bulk biasing (FBB) was monitored and the maximum current level is always lower than 1 nA. Additionally, as the bulk voltages (VBN and VBP) are limited to a maximum forward biasing from 0 to 0.4 V there is no risk for latch-ups due to FBB [19].

To evaluate the DCVS and DCCS operation we have performed some post-layout simulations by changing the reference current level and monitoring the current drained from the supply voltage and the output DC voltage. Figure 11 shows the results of this analysis. The I_{ref} level is changed from 10 μA to 30 μA and the V_{DD} current follows the ref-

Table I.: State-of-the-art low-voltage and low-power LNTAs

Specifications	[6]	[15]	[14]	[12]	[7]	[21]	[11]	[22]	[8]	[23]	**This Work**
Tech. node [nm]	130	130	40	180	65	180	180	65	65	130	**65**
VDD [V]	0.4	0.4	0.8	0.6	0.5	0.75	0.4	0.35	0.55	0.9 ↔ 2.0	**0.4**
Power [μW]	60	160	30	600	174	980	170	570	36	299.8	**235.1**
NF [dB]	5.3	4.5	3.3	4	6.8	3.45	2.8	2.3	2.8	4.51	**3.17**
Gain [dB]	13.1	13	14.2	4↔10[a]	11	14	10.6	15.4	15	13.96	**12.6**
Frequency [GHz]	2.4	0.6 ↔ 3.1	2.4	2.8	2.4	2.4	2.4	2.32	0.63	2.4	**2.4**
IIP3 [dBm]	-12.2	-10	-11.6	0	-2.2	-8	-8.1	-14.05	-8.8	-16.6	**-4.7**
Area [mm^2]	0.63	0.39	-	0.90	-	0.375	0.19	0.50	0.022[c]	0.91	**0.11**
FoM1 [GHz]	4.6	0.9 ↔ 4.8	24.9	-	7.79	1.8	8.2	1.35	14.4	0.48	**14.7**
FoM2 [GHz]	13.7	2.8 ↔ 14.3	31.2	-	18.7	3.85	36.8	4.63	31.51	-	**41.37**
Meas./Sim. [M/S]	M	M	S	M	M	S[b]	S[b]	S[b]	M	M	**S[b]**

[a]Power Gain, [b]Post-Layout, [c]Off-chip matching

erence current level in the range from 13 μA to 24 μA. This result shows that it is possible to control the CMOS inverter drained current using the proposed DCCS block. Additionally, the DC output voltage is kept around 200 mV, changing from 190 to 210 mV in the linear current region. It shows that the DCVS operates well for different values of I_{ref}.

To verify the robustness of the proposed circuit we performed some post-layout simulation based on Monte Carlo analyses for different biasing configurations and temperature and voltage corners. Both global process and mismatch statistical models were considered in the Monte Carlo simulation runs.

The biasing comparison analysis was executed by adopting three biasing circuits. The first one is the complete proposed circuit with the replica biasing to compensate for the output voltage and drain current, using DCCS and DCVS circuits. The second one is the circuit with only the output DC voltage compensation using DCVS circuit in which the bulk terminal of the NMOS transistors is tied to a constant voltage $V_{DD}/2$. The third one is the simulation without any active biasing, in which both the PMOS and NMOS bulk terminals are tied to $V_{DD}/2$. The results of this analysis are summarized in the frequency histograms shown in Fig. 12. In parts (a) and (b) it is possible to see the small variability of both the output DC voltage and the drained current from V_{DD} presented by the proposed biasing in comparison to the other biasing configurations. As demonstrated, the use of the DCCS and DCVS circuits makes it possible to compensate for the variability in both the voltage and current without adding any extra stacked series transistor. Additionally, as shown in section II, the reduction in the variability of the output voltage and drain current results in reduced variability in both A_v and NF, as it is visible in parts (c) and (d) of Fig. 12. The obtained standard deviations (σ) of the A_v and NF at 2.4 GHz are equal to 0.5 dB and 0.1 dB, respectively.

The analysis of the complete process, voltage and temperature (PVT) variability is performed also by using 1,000 runs of post-layout Monte Carlo simulation but considering two worst-case corners scenarios for the supply voltage and temperature. It was considered a variation of $\pm 10\%$ in V_{DD} and a temperature range of -40°C to 100°C. The results of this analysis are summarized in Fig. 13, which shows the frequency histograms of the output DC voltage, V_{DD} current, and A_v and NF at 2.4 GHz. As can be seen in parts (a) and (b) of Fig. 13 the small variability of the voltage and current remains even with the variation of V_{DD} from 0.36 V to 0.44 V and temperature from -40°C to 100°C. The average value of the output voltage and the V_{DD} current are changed in the range of 181.3 mV to 200 mV and 543.9 μA to 579.1 μA, respectively. Parts (c) and (d) of Fig. 13 show the histograms for A_v and NF at 2.4 GHz, which also present small variability. The average value of A_v is changed from 11.4 dB at 0.36 V and 100°C to 13.5 dB at 0.44 V and -40°C. The noise figure has changed from 2.2 dB to 3.9 dB for the same corners. The variability of the average values is mainly due to the temperature variation since the V_{DD} variability is compensated by the DCCS and DCVS circuits.

Table I shows the complete post-layout simulation results and a comparison with other state-of-the-art ULV low-power LNTAs. The proposed circuit presented promising performance values and a smaller silicon area among the fully integrated circuits. Figures of merit FoM1 and FoM2 presented in [11] are used to compare the performance of the proposed LNTA with state-of-the-art related implementations.

$$\text{FoM1} = \frac{S_{21[lin.]} \cdot IIP_{3[mW]} \cdot f_{op[GHz]}}{(NF_{[lin.]} - 1) \cdot P_{[mW]}} \tag{4}$$

$$\text{FoM2} = \frac{S_{21[lin.]} \cdot IIP_{3[mW]} \cdot f_{op[GHz]}}{(NF_{[lin.]} - 1) \cdot P_{[mW]} \cdot \frac{V_{dd}}{V_{ddN}}} \tag{5}$$

The difference between the two figures of merit is that FoM2 considers the fraction of the nominal supply voltage (V_{ddN}) used to supply the circuit as a weighting factor, enhancing the low voltage characteristic of the proposed solution.

Our design presented the highest FoM2. Regarding FoM1, we achieved the second-highest one among the compared works. Our results are based on post-layout simulations and a complete Monte-Carlo analysis shows the LNTA main parameters variation. For a fair comparison, we expect a small reduction of FoM1 and FoM2 after measurements. Overall, our work shows that good performance can be achieved even without the use of input or coupling transformers, as adopted in [8] and [14]. Additionally, we have designed the LNTA to present a real input impedance lower than 50 Ω to simplify the input impedance matching by using only the L_G inductor.

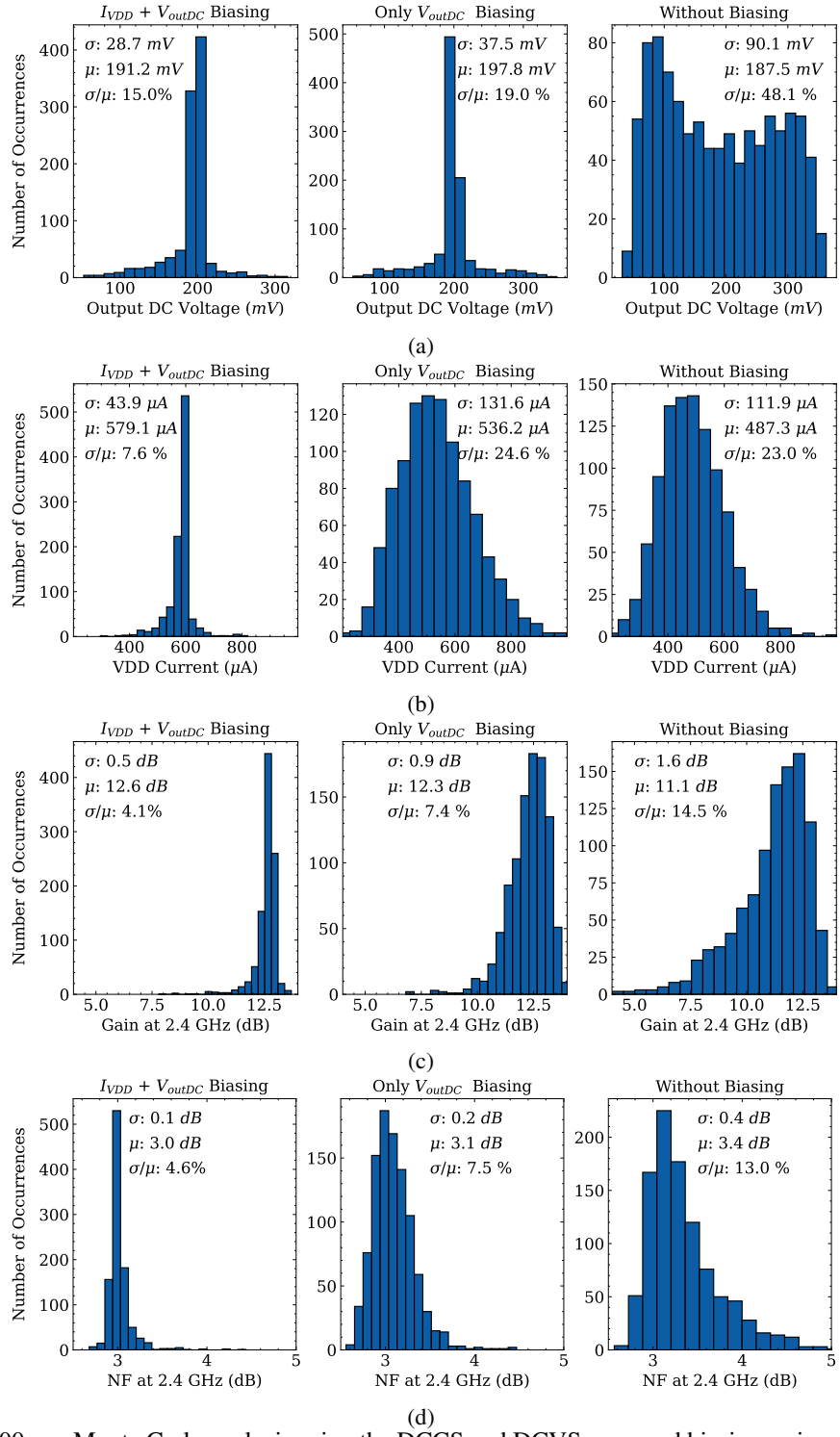

Fig. 12: Simulated 1,000-run Monte Carlo analysis using the DCCS and DCVS proposed biasing, using only the DCVS circuit and without any compensation circuit. (a) Output DC voltage, (b) V_{DD} current, (c) A_v at 2.4 GHz and (d) NF at 2.4 GHz.

V. Conclusion

A new PVT robust biasing strategy for ULV inverter-based LNTAs was proposed in this paper. It is based on controlling both the drain current and output DC voltage of the LNTA employing two closed-loop forward bulk biasing circuits, without additional stacked transistors. The proposed biasing circuit is demonstrated in the design of a 0.4 V LNTA in 65 nm CMOS process operating at the 2.4 GHz ISM frequency. Post-layout Monte Carlo analysis shows the reduced sensitivity to the PVT variability in the output DC voltage and drained current in comparison to other biasing configurations. This led to a lower variability of noise figure and voltage gain at the operating frequency. Additionally, the typical post-layout simulation presented improved performance metrics in comparison to state-of-the-art low-voltage LNTA implementations.

Digital Object Identifier 10.29292/jics.v20i1.951

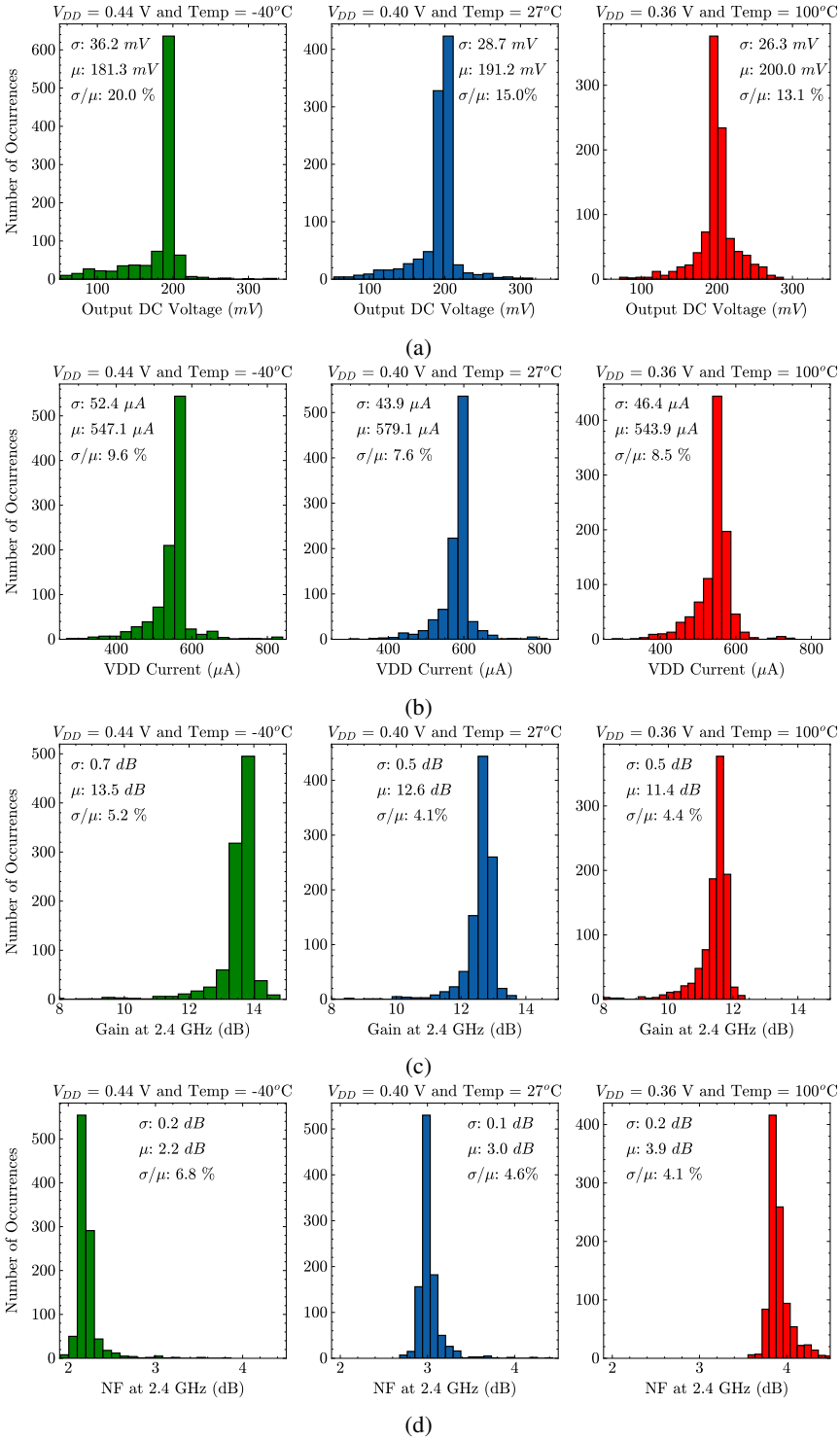

Fig. 13: Simulated 1,000-run Monte Carlo analysis considering two temperature and supply voltage corners. (a) Output DC voltage, (b) V_{DD} current, (c) A_v at 2.4 GHz and (d) NF at 2.4 GHz.

Acknowledgements

This work was supported by the Brazilian National Council for Scientific and Technological Development (CNPq) under grant numbers 420693/2023-8, 407344/2022-5 and 303609/2023-0, and by Rio Grande do Sul State Research Support Foundation (FAPERGS), grant 22/2551-0000841-0.

References

[1] H. Yi, W. Yu, P. Mak, J. Yin and R. P. Martins, "A 0.18-V 382-μW Bluetooth Low-Energy Receiver Front-End With 1.33-nW Sleep Power for Energy-Harvesting Applications in 28-nm CMOS," IEEE Journal of Solid-State Circuits, vol. 53, no. 6, pp. 1618-1627, 2018. doi: 10.1109/JSSC.2018.2815987

[2] L. Severo and W. Van Noije, Ultra-low Voltage Low Power Active-RC Filters and Amplifiers for Low Energy RF Receivers. Springer International Publishing, 2022. doi: https://doi.org/10.1007/978-3-030-90103-5

[3] C. Chen, D. Huang, Y. Zhao, Y. Jin and J. Yang, "An Ultra-Low-Voltage 2.4-GHz Flicker-Noise-Free RF Receiver Front End Based on Switched-Capacitor Hybrid TIA With 4.5-dB NF and 11.5-dBm

OIP3," in IEEE Journal of Solid-State Circuits, vol. 58, no. 7, pp. 1825-1837, 2023. doi: 10.1109/JSSC.2023.3266268

[4] L. Lei, F. Han, Z. Liu, Q. Qi, X. Wang, and W. Wang, "A 320 μW Multi-Band Receiver with N-Path Switched-Capacitor Networks," Electronics, vol. 11, no. 24, p. 4111, 2022. doi: https://doi.org/10.3390/electronics11244111

[5] E. Kargaran, D. Manstretta and R. Castello, "Design Considerations for a Sub-mW Receiver Front-End for Internet-of-Things," in IEEE Open Journal of the Solid-State Circuits Society, vol. 1, pp. 37-52, 2021. doi: 10.1109/OJSSCS.2021.3110461

[6] T. Taris, J. Begueret and Y. Deval, "A 60 μW LNA for 2.4 GHz wireless sensors network applications," 2011 IEEE Radio Frequency Integrated Circuits Symposium, Baltimore, MD, 2011, pp. 1-4. doi:10.1109/RFIC.2011.5940633

[7] K. Xu, J. Yin, P. -I. Mak, R. B. Staszewski and R. P. Martins, "A Single-Pin Antenna Interface RF Front End Using a Single-MOS DCO-PA and a Push–Pull LNA," in IEEE Journal of Solid-State Circuits, vol. 55, no. 8, pp. 2055-2068, 2020. doi: 10.1109/JSSC.2020.2991520.

[8] H. Rahmanian Kooshkaki and P. P. Mercier, "A 36 uW 2.8–3.4 dB Noise Figure Impedance Boosted and Noise Attenuated LNA for NB-IoT," in IEEE Transactions on Circuits and Systems I: Regular Papers, vol. 70, no. 1, pp. 101-113, Jan. 2023. doi: 10.1109/TCSI.2022.3213504.

[9] M. M. Vinaya, R. Paily and A. Mahanta, "A New PVT Compensation Technique Based on Current Comparison for Low-Voltage, Near Sub-Threshold LNA," in IEEE Transactions on Circuits and Systems I: Regular Papers, vol. 62, no. 12, pp. 2908-2919, 2015. doi: 10.1109/TCSI.2015.2486078.

[10] B. Razavi, RF Microelectronics. New York: Prentice Hall, 2012.

[11] G. Ceolin and L. Compassi-Severo, "A 0.4 V Active Biased LNA for 2.4 GHz Low Energy RF Receivers," in Journal of Integrated Circuits and Systems, Vol. 17, no. 2, 2022. doi: https://doi.org/10.29292/jics.v17i2.559

[12] J. Hsieh and K. Lin, "A 0.6-V Low-Power Variable-Gain LNA in 0.18-μm CMOS Technology," in IEEE Transactions on Circuits and Systems II: Express Briefs, vol. 67, no. 1, pp. 23-26, Jan. 2020. doi: 10.1109/TCSII.2019.2902301

[13] Compassi-Severo, Lucas and Van Noije, Wilhelmus "A 0.4-V 10.9-μW/Pole Third-Order Complex BPF for Low Energy RF Receivers," in IEEE Transactions on Circuits and Systems I: Regular Papers, vol. 66, no. 6, pp. 2017-2026, 2019. doi: 10.1109/TCSI.2019.2906206

[14] E. Kargaran, D. Manstretta and R. Castello, "Design and Analysis of 2.4 GHz 30 μW CMOS LNAs for Wearable WSN Applications," IEEE Transactions on Circuits and Systems I: Regular Papers, vol. 65, no. 3, pp. 891-903, 2018. doi: 10.1109/TCSI.2017.2771940

[15] M. Parvizi, K. Allidina and M. N. El-Gamal, "Short Channel Output Conductance Enhancement Through Forward Body Biasing to Realize a 0.5 V 250 μA 0.6–4.2 GHz Current-Reuse CMOS LNA," in IEEE Journal of Solid-State Circuits, vol. 51, no. 3, pp. 574-586, March 2016. doi: 10.1109/JSSC.2015.2504413

[16] F. Centurelli, G. Giustolisi, S. Pennisi and G. Scotti, "A Biasing Approach to Design Ultra-Low-Power Standard-Cell-Based Analog Building Blocks for Nanometer SoCs," in IEEE Access, vol. 10, pp. 25892-25900, 2022. doi: 10.1109/ACCESS.2022.3156890.

[17] R. D. Sala, F. Centurelli and G. Scotti, "A Novel High Performance Standard-Cell Based ULV OTA Exploiting an Improved Basic Amplifier," in IEEE Access, vol. 12, pp. 17513-17521, 2024. doi: 10.1109/ACCESS.2024.3359157

[18] Severo, L. and Van Noije, W., "0.36 V PGA combining single-stage OTA and input negative transconductor for low energy RF receivers." in Electronics Letters., 54: 319-320, 2018. doi: https://doi.org/10.1049/el.2017.4464

[19] Chatterjee, S., Pun, K. P., Stanić, N., Tsividis, Y., and Kinget, P., "Analog circuit design techniques at 0.5 V." New York, Springer, 2007. doi: 10.1007/978-0-387-69954-7

[20] Z. Liu, C. C. Boon and Y. Dong, "A 0.6 V, 1.74 mW, 2.9 dB NF Inductorless Wideband LNA in 28-nm CMOS Exploiting Noise Cancellation and Current Reuse," in IEEE Transactions on Circuits and Systems I: Regular Papers, 2024. doi: 10.1109/TCSI.2024.3408901.

[21] Fakhralsadat Rastegari, Massoud Dousti, Behbod Ghalamkari, A 0.75 V Sub-mW CMOS LNA employing transmitted signal suppression technique in a full-duplex wireless brain-machine interface transceiver, AEU - International Journal of Electronics and Communications, Volume 132, 2021, 153632, ISSN 1434-8411, https://doi.org/10.1016/j.aeue.2021.153632.

[22] Sajad Nejadhasan, Fatemeh Zaheri, Ebrahim Abiri, Mohammad Reza Salehi, PVT-compensated low voltage LNA based on variable current source for low power applications, AEU -International Journal of Electronics and Communications, Volume 143, 2022, 154042, ISSN 1434-8411, https://doi.org/10.1016/j.aeue.2021.154042.

[23] M. Lee, M. M. Elbadry and K. Moez, "A 300-μW 2.4-GHz PVT-Insensitive Subthreshold Reference-Based LNA," in IEEE Journal of Solid-State Circuits, doi: 10.1109/JSSC.2024.3375154.